LONG SEAMS

COURSE	ORIENTATION	ORIENTATION
1(TOP)	120°	300°
2	115°	295°
3	120°	300°
4	115°	295°

*VERT – TOP TO BOTTOM

Ship loose items:
(1 PC.) Swing gate (A71-24 (Galv.))
(1 PC.) Caged Ladder W/ Hardware
(2 PCS.) Handrail W/ Hardware

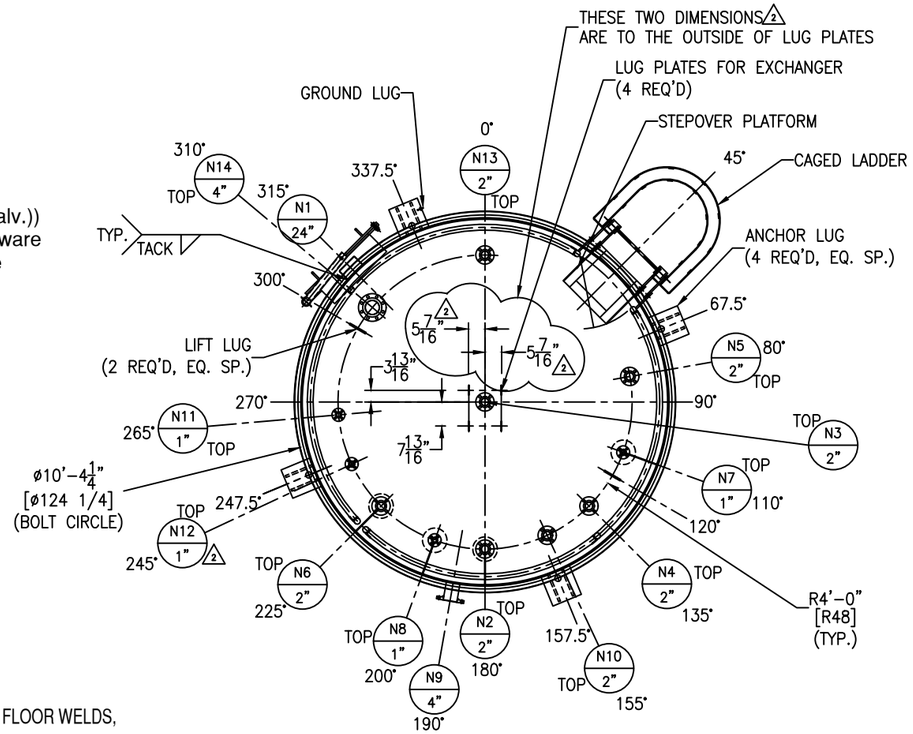

NOTE: 7
VACUUM BOX TEST IS DONE FOR FLOOR WELDS, BEFORE DOING HYDRO TESTING.

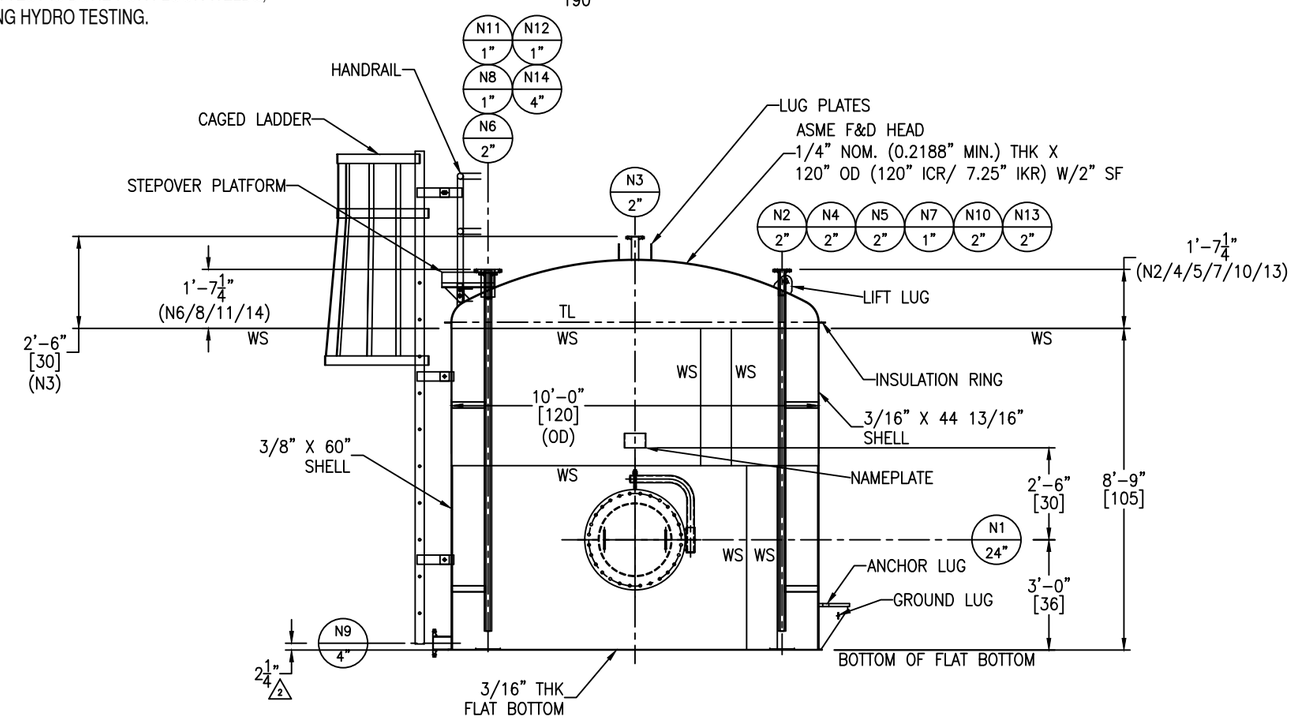

FC-14 GT-11

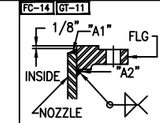

FIGURE NO. 1

FC-14 GT-11

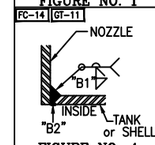

FIGURE NO. 4

FC-14 GT-11

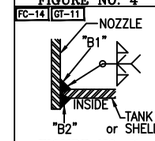

FIGURE NO. 7

FC-14 SA-30

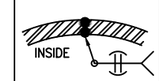

SHELL THK. < 5/16"

FIGURE NO. 9

FC-14 SA-30

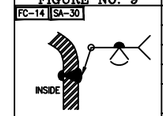

FOR HEADS
FIGURE NO. 11

△1 NOZZLE SCHEDULE

MARK	SERVICE	SIZE	RATING	TYPE / STYLE	NECK SCHED.	PROJECTION EXT. (℄)	PROJECTION INT. (MIN.)	WELD FIGURE	REPAD SIZE (WIDTH X THK.)	WELD SIZE "A1"	"A2"	"B1"	"B2"	"C1"	"C2"
N1	MANWAY	24"	–	API W/DAVIT	1/4"	6"	1"	7	–	–	–	1/4	1/8	–	–
N2	LIQUID INLET	2"	150#	RFSO	40S	SEE DWG	SEE DWG	1,7	–	3/16	1/4	3/16	1/8	–	–
N3	VENT	2"	150#	RFSO	40S	SEE DWG	–	1,4	–	3/16	1/4	1/4	1/8	–	–
N4	LEVEL TRANSMITTER	2"	150#	RFSO	40S	SEE DWG	1"	1,7	–	3/16	1/4	3/16	1/8	–	–
N5	LEVEL SWITCH	2"	150#	RFSO	40S	SEE DWG	1"	1,7	–	3/16	3/16	3/16	1/8	–	–
N6	LIQUID INLET	2"	150#	RFSO	40S	SEE DWG	SEE DWG	1,7	–	3/16	1/4	3/16	1/8	–	–
N7	LIQUID INLET	1"	150#	RFSO	40S	SEE DWG	SEE DWG	1,7	–	3/16	1/4	3/16	1/8	–	–
N8	LIQUID INLET	1"	150#	RFSO	40S	SEE DWG	SEE DWG	1,7	–	3/16	1/4	3/16	1/8	–	–
N9	BOTTOM OUTLET	4"	150#	RFSO	40S	6"	–	1,4	–	1/4	1/4	1/4	1/8	–	–
N10	VAPOR RETURN	2"	150#	RFSO	40S	SEE DWG	1"	1,7	–	3/16	1/4	3/16	1/8	–	–
N11	PRESSURE SENSING	1"	150#	RFSO	40S	SEE DWG	1"	1,7	–	3/16	1/4	3/16	1/8	–	–
N12	NITROGEN	1"	150#	RFSO	40S	SEE DWG	1"	1,7	–	3/16	1/4	3/16	1/8	–	–
N13	PRESSURE	2"	150#	RFSO	40S	SEE DWG	1"	1,7	–	3/16	1/4	3/16	1/8	–	–
N14	RELIEF	4"	150#	RFSO	40S	SEE DWG	1"	1,7	–	1/4	1/4	1/4	1/8	–	–

MATERIALS OF CONSTRUCTION

	VESSEL
SHELL	SA240-316/316L
HEADS	SA240-316/316L
RIM ANGLE	–
NOZZLE NECKS	SA312-316/316L WLD
NOZZLE FLANGES	SA182F-316/316L
MANWAY NECKS	SA240-316/316L
MANWAY FLANGES	SA240-316/316L
GASKETS	PTFE
BOLTS/STUDS	SA193-B7 (ZINC PLATED)
NUTS	SA194-2H (ZINC PLATED)
WEAR PAD	SA240-316/316L
DIPTUBE SUPPPRT	SA240-316/316L
SUPPORTS/HOLD DOWNS	SA240-304/304L
LIFTING LUGS	SA240-304/304L
VACUUM RINGS	–
INSULATION RINGS	SA240-304/304L
GROUND LUG	SA240-304/304L
BAFFLE	–
LADDER	SA36
TANK CLIPS	SA240-304/304L
LADDER CLIPS	SA36
HANDRAIL	SA500
HANDRAIL CLIPS	SA36
POST CLIPS	SA479-304/304L
DIPTUBE SUPPORT	SA240-316/316L
PLATFORM	SA240-304/304L
PLATFORM SUPPORT	SA240-304/304L
JACKET NOZZLE NECKS	–
JACKET NOZZLE FLANGES	–

DESIGN DATA

	VESSEL
DESIGN AND FAB. CODE	API620 (AS APPLICABLE)
CERT. STAMP REQ'D.	NO
DESIGN PRESSURE	15 PSIG
DESIGN TEMPERATURE	120° F
MIN. DESIGN METAL TEMP.	-20° F @ 15 PSIG
OPERATING PRESSURE	1 PSIG
OPERATING TEMPERATURE	120° F
JOINT EFFICIENCY HEADS	0.70
JOINT EFFICIENCY SHELL	0.70
CORROSION ALLOWANCE	0"
SPECIFIC GRAVITY	1.0
EARTHQUAKE ZONE	Ss = (0.550) S1 = (0.160)
WIND LOAD	104 MPH
STRESS RELIEF	NOT REQ'D
RADIOGRAPHIC EXAM	NOT REQ'D
DYE PENETRANT EXAM	NOT REQ'D
MAGNETIC PARTICLE EXAM	NOT REQ'D
HYDROSTATIC TEST	19 PSIG (SEE NOTE 7)
PNEUMATIC TEST	NOT REQ'D
JKT DESIGN AND FAB. CODE	–
JKT CERT. STAMP REQ'D.	–
JKT DESIGN PRESSURE	–
JKT DESIGN TEMPERATURE	–
JKT MIN. DESIGN METAL TEMP.	–
JKT OPERATING PRESSURE	–
JKT OPERATING TEMPERATURE	–
JKT JOINT EFFICIENCY HEADS	–
JKT JOINT EFFICIENCY SHELL	–
JKT HYDRO TEST	–

VESSEL FINISH

INTERIOR WELD TREATMENT:	SAV TANK STANDARD
EXTERIOR WELD TREATMENT:	SAV TANK STANDARD
SAV TANK FINISHING STANDARD:	SEE NOTE 5
INSULATION:	2" BY OTHERS
GALVANIZING:	SEE NOTE 6

VESSEL CAPACITY AND WEIGHTS

OPERATING CAPACITY	5,000 GAL.
FULL CAPACITY	5,700 GAL.
EMPTY SHIPPING WEIGHT W/O ACCESSORIES	6,200 LBS.
WEIGHT FULL OF WATER	55,200 LBS.
WEIGHT FULL OF PRODUCT	55,200 LBS.
WEIGHT OF ACCESSORIES	700 LBS.

QUALITY CONTROL

ENG. _____ DATE: _____

Q.C. _____ DATE: _____

This drawing is issued for customer approval. please review, make approval changes (if any) in red. check the appropriate box, sign & date.

- ☐ Approval – no changes. Please proceed with fabrication.
- ☐ Approved as noted. Please proceed with fabrication
- ☐ Not approved. Please make changes and resubmit.

Customer signature _____ Date _____

GENERAL NOTES

1.) COVER ALL FLANGES, OPENINGS & MACHINED SURFACES PRIOR TO SHIPMENT UNLESS OTHERWISE NOTED.
2.) BOLT HOLES TO STRADDLE 0° & 180° UNLESS OTHERWISE NOTED.
3.) MANUFACTURING TOLERANCE TO BE IN ACCORDANCE WITH API STANDARD 650 7.5.
4.) ASME MATERIALS TO CONFORM TO THE FOLLOWING: FLANGES – B16.5, FITTINGS – B16.9 & COUPLINGS – B16.11.
5.) PICKLE ALL EXTERIOR WELDS. PASSIVATE INTERIOR & EXTERIOR OF VESSEL.
6.) GALVANIZING: HANDRAIL & LADDER TO BE HOT DIPPED GALVANIZED.
7.) VACUUM BOX TEST IS DONE FOR FLOOR WELDS, BEFORE DOING HYDRO TESTING.

△1 REVISIONS

REV	D.BY	C.BY	DATE	DESCRIPTION
				AS BUILT
2	AD	RS	2/5/26	CERTIFIED
1	RS	NP	1/23/26	APPROVAL REV 1
0	AD	RS	12/5/25	APPROVAL

Savannah Tank & Equipment Corp.
1517 Telfair Road, Savannah, GA 31415
(912) 233-8902

DRAWN BY: AD
CHK'D BY: RS
APPROVED BY: NP
SCALE: 3/8" = 1'-0"

EPIC SYSTEMS GROUP, LLC.
ORGANIC WASTE TANK
EQUIP. #T-121
CUST. PO #64354

DRAWING NO.: 106-25-1 SHT 1 OF 5 REV. SET 2

FC-14

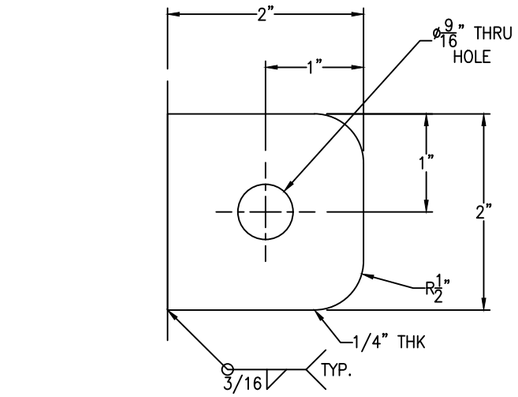

GROUND LUG IS LOCATED @ 337.5°

GROUND LUG DETAIL

(1 REQ'D) SCALE: 1'-0" = 1'-0"

FC-14

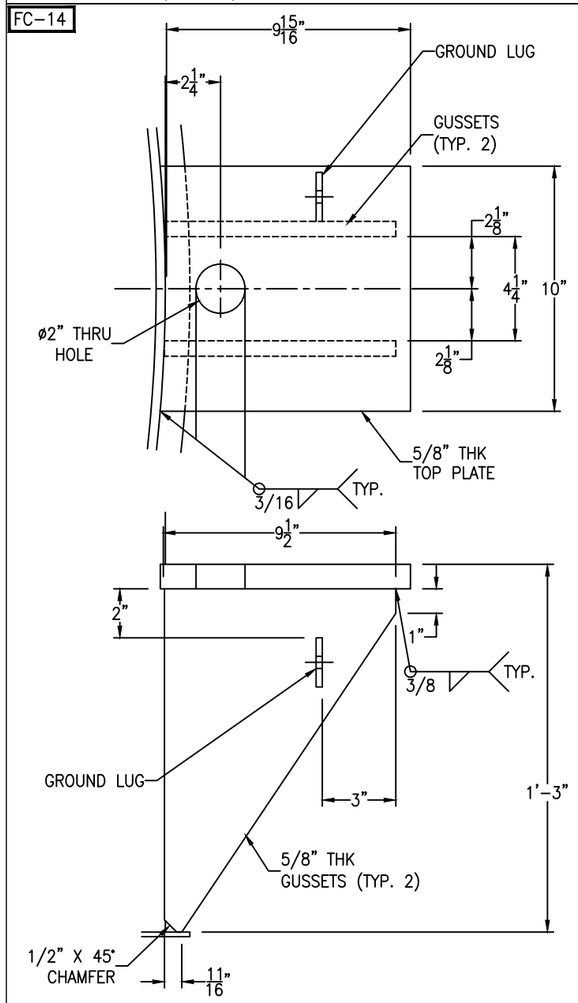

ANCHOR LUG DETAIL

(4 REQ'D) SCALE: 3" = 1'-0"

FC-14

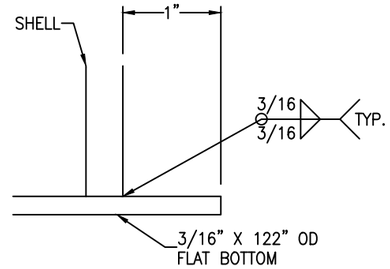

FLAT BOTTOM DETAIL

SCALE: 1'-0" = 1'-0"

FC-14

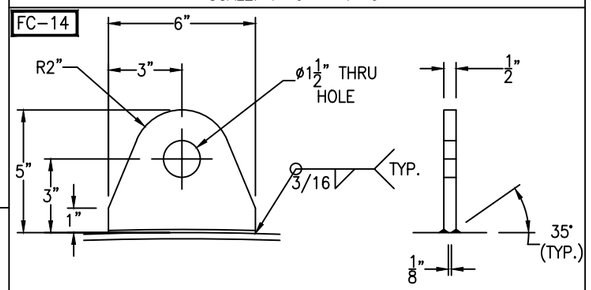

TANK WT. <= 10000#
SHACKLE PIN DIA. = 1"

LIFT LUG DETAIL

(2 REQ'D) SCALE: 3" = 1'-0"

FC-14

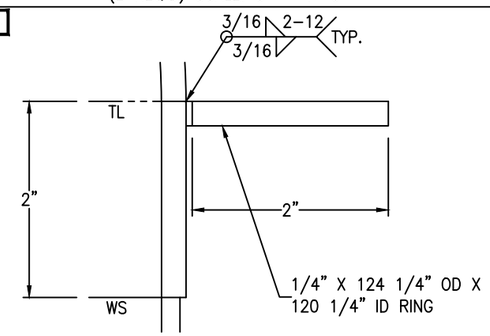

INSULATION RING DETAIL

SCALE: 1'-0" = 1'-0"

FC-14

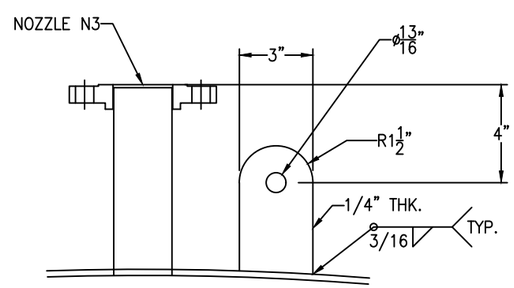

*LENGTH OF THE PLATES TO BE ADJUSTED DURING FABRICATION.

LUG PLATES DETAIL

(4 REQ'D) SCALE: 3" = 1'-0"

FC-14

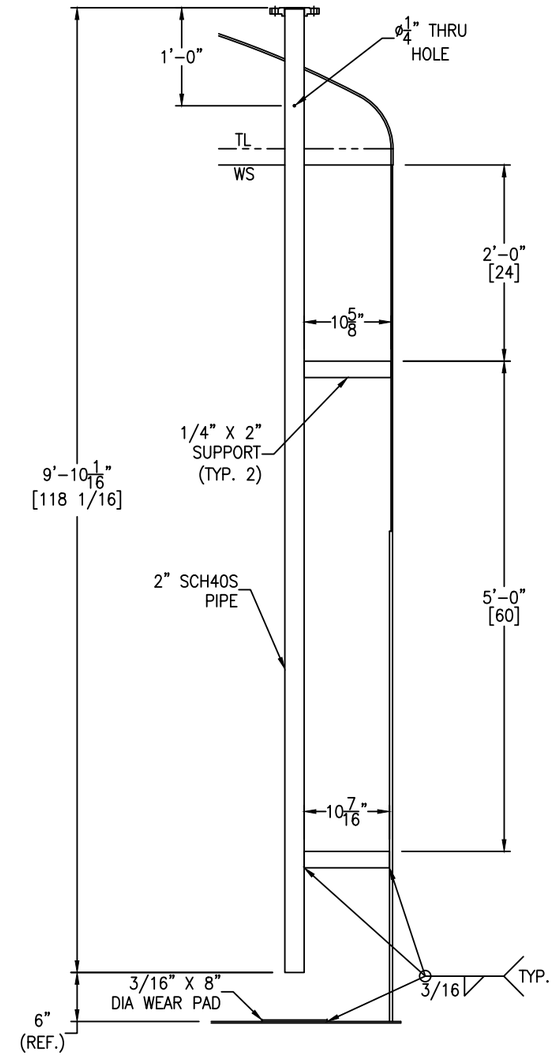

NOZZLE N2, N6 DETAIL

(2 REQ'D) SCALE: 1" = 1'-0"

FC-14

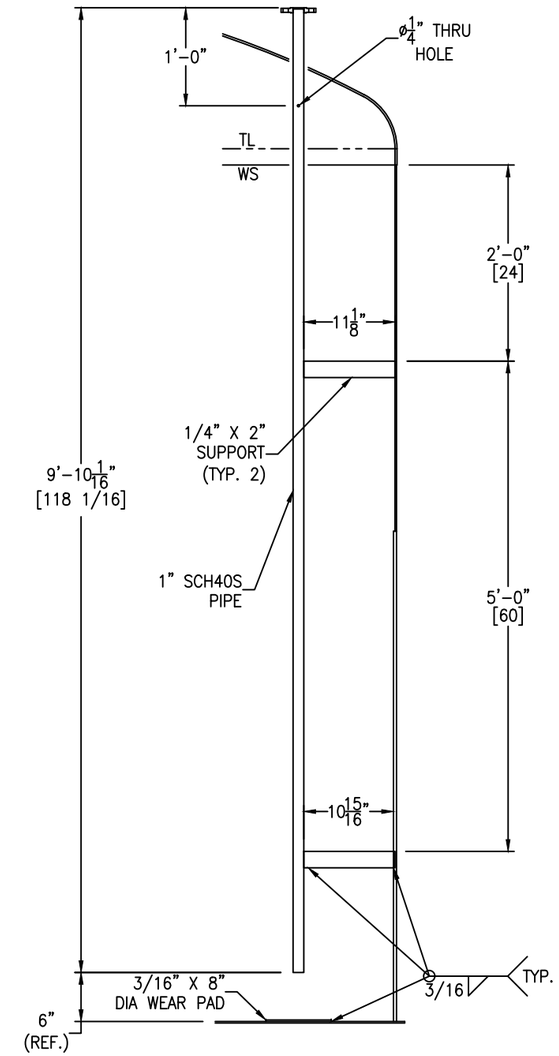

NOZZLE N7, N8 DETAIL

(2 REQ'D) SCALE: 1" = 1'-0"

REV	D.BY	C.BY	DATE	DESCRIPTION
				AS BUILT
2	AD	RS	2/5/26	CERTIFIED
1	RS	NP	1/23/26	APPROVAL REV 1
0	AD	RS	12/5/25	APPROVAL

REVISIONS

Savannah Tank & Equipment Corp.
1517 Telfair Road, Savannah, GA 31415
(912) 233-8902

DRAWN BY: AD
CHK'D BY: RS
APPROVED BY: NP
SCALE: 3/8" = 1'-0"

EPIC SYSTEMS GROUP, LLC.
DODECANETHIOL TANK
EQUIP. #T-101
CUST. PO #64354

DRAWING NO.: 102-25-2 | SHT 2 OF 5 | REV. SET 2

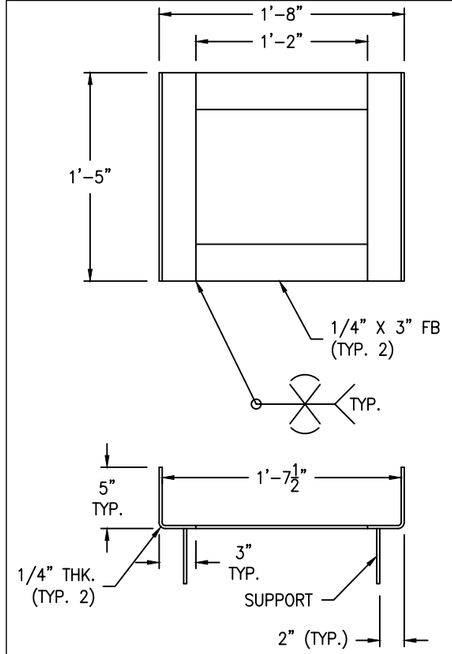

STEPOVER FRAME DETAIL (SS304)

(1 REQ'D) SCALE: 1 1/2" = 1'-0"

FC-14

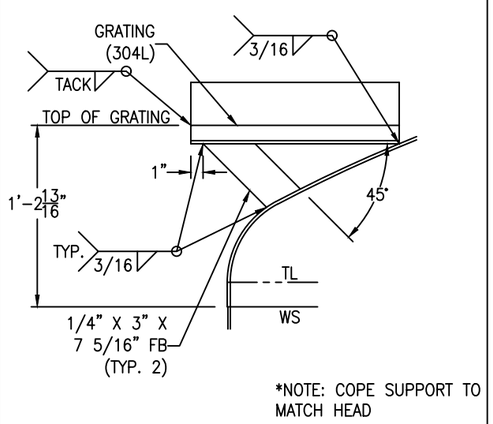

STEPOVER DETAIL

(1 REQ'D) SCALE: 1 1/2" = 1'-0"

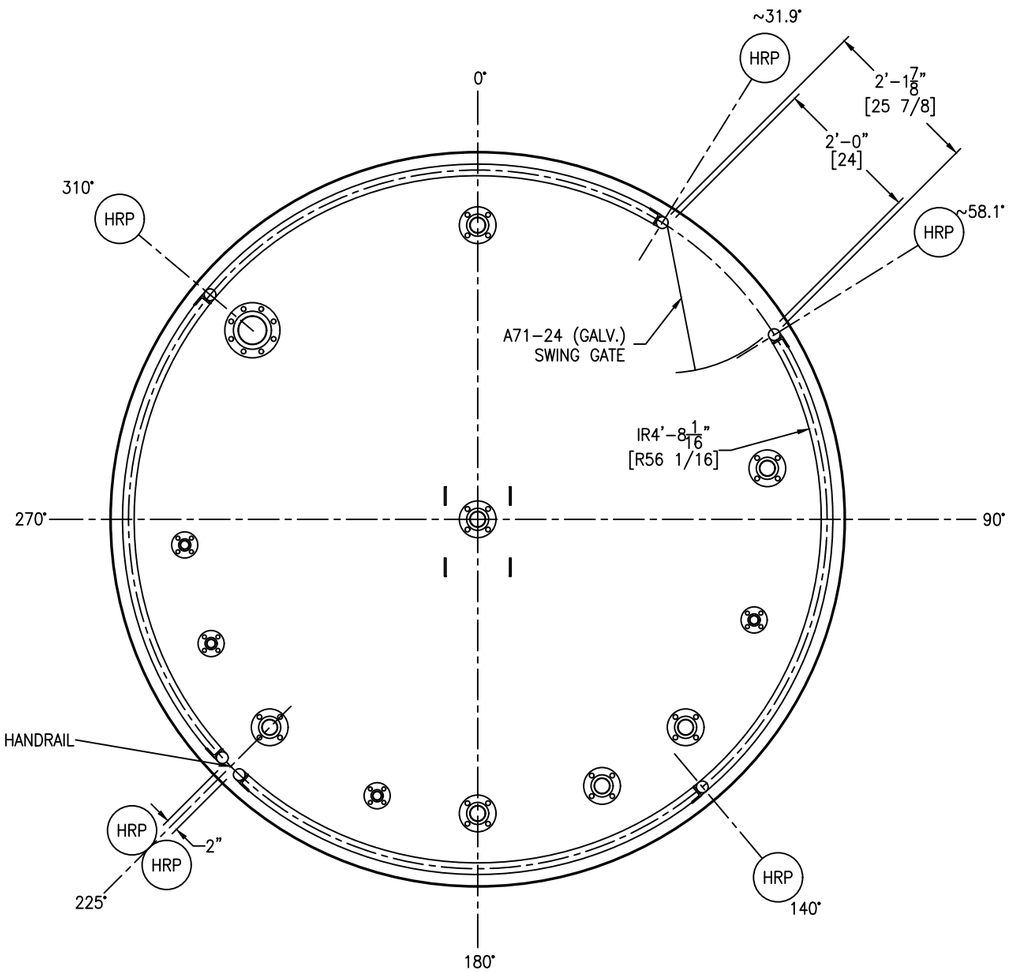

HANDRAIL DETAIL

SCALE: 3/4" = 1'-0"

FC-14

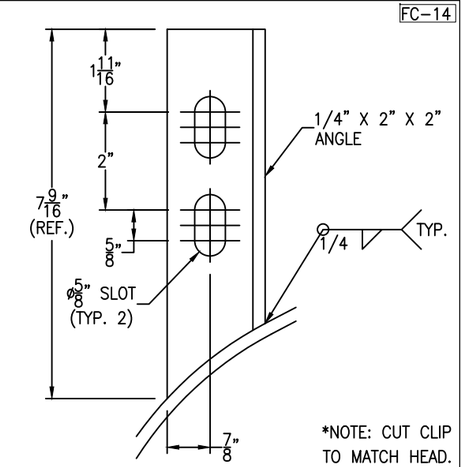

POST CLIP DETAIL

(6 REQ'D) SCALE: 6" = 1'-0"

GM-73

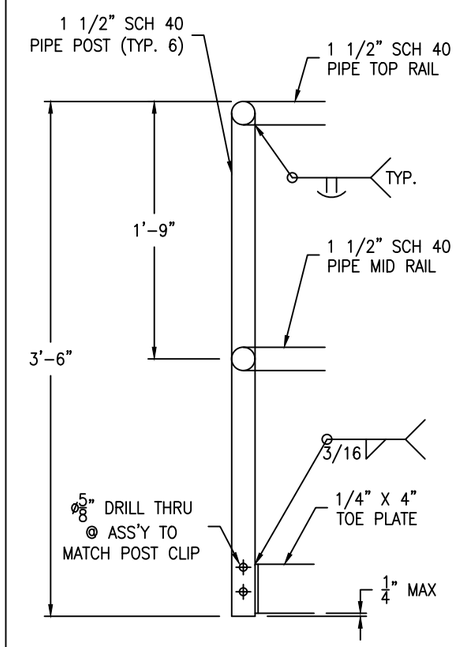

HANDRAIL DETAIL

SCALE: 1 1/2" = 1'-0"

HANDRAIL BOLTING:
(12) 1/2-13 NC X 3" HH BOLT - SA193-B7 (ZINC PLATED)
(12) 1/2-13 NC HH NUT - SA194-2H (ZINC PLATED)

HANDRAIL TO BE HOT-DIPPED GALVANIZED

REV	D.BY	C.BY	DATE	DESCRIPTION
				AS BUILT
2	AD	RS	2/5/26	CERTIFIED
1	RS	NP	1/23/26	APPROVAL REV 1
0	AD	RS	12/5/25	APPROVAL

REVISIONS

Savannah Tank & Equipment Corp.
1517 Telfair Road, Savannah, GA 31415
(912) 233-8902

DRAWN BY: AD
CHK'D BY: RS
APPROVED BY: NP
SCALE: 3/8" = 1'-0"

EPIC SYSTEMS GROUP, LLC.
DODECANETHIOL TANK
EQUIP. #T-101
CUST. PO #64354

DRAWING NO.: 102-25-3 | SHT 3 OF 5 | REV. SET 2

LADDER CLIP BOLTING:
(6) 5/8-11 NC X 2" HH BOLT – SA193-B7 (ZINC PLATED)
(6) 5/8-11 NC HH NUT – SA194-2H (ZINC PLATED)

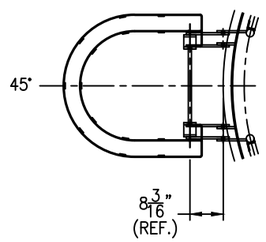

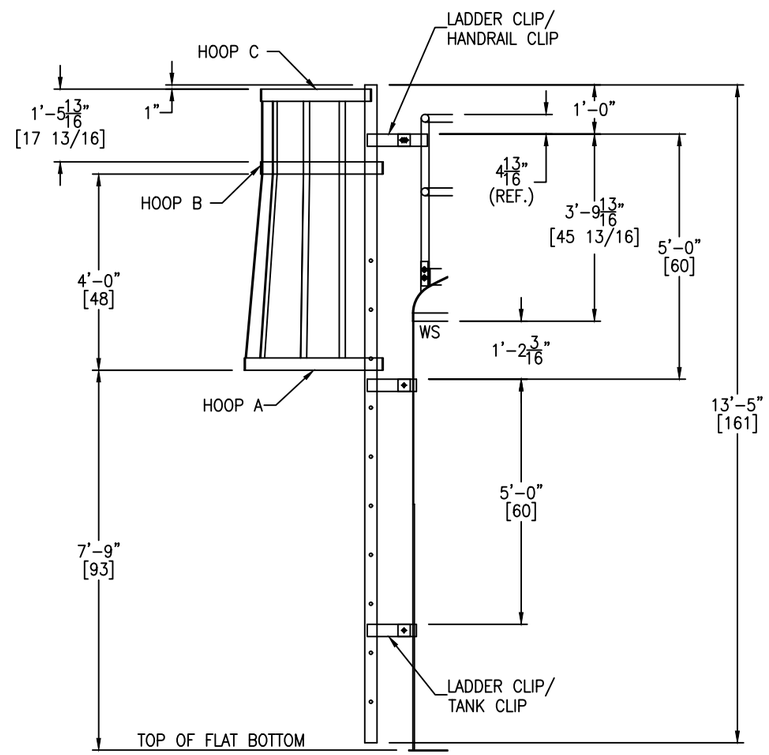

LADDER DETAIL

SCALE: 1/2" = 1'-0"

GM-73

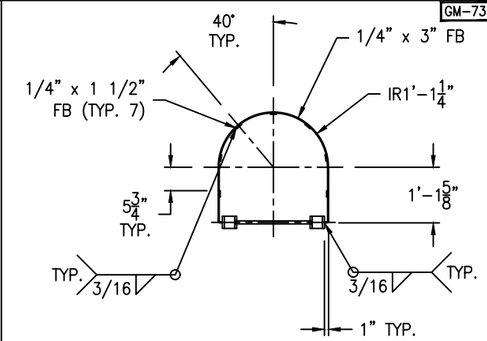

HOOP "C" DETAIL

(1 REQ'D) SCALE: 1/2" = 1'-0"

GM-73

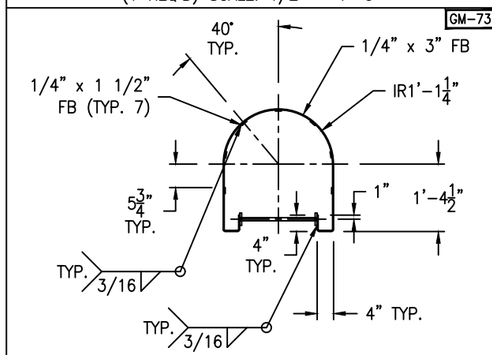

HOOP "B" DETAIL

(1 REQ'D) SCALE: 1/2" = 1'-0"

GM-73

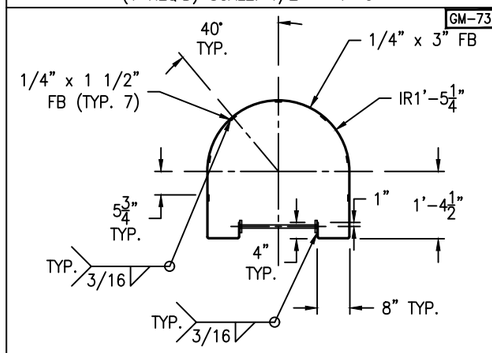

HOOP "A" DETAIL

(1 REQ'D) SCALE: 1/2" = 1'-0"

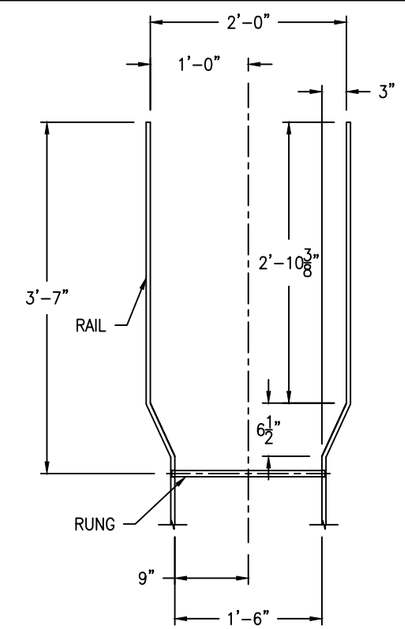

WALK-THRU DETAIL

SCALE: 1" = 1'-0"

GM-73

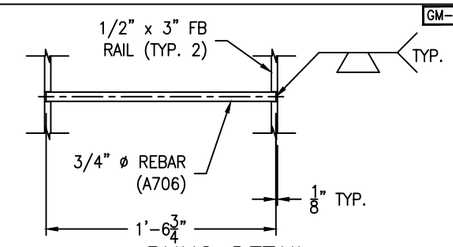

RUNG DETAIL

(10 REQ'D) SCALE: 1 1/2" = 1'-0"

SEE SHT #1 FOR ELEVATION

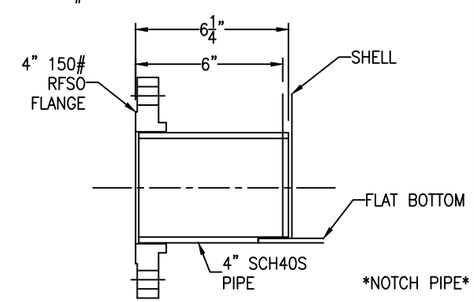

⚠2 NOZZLE N9 DETAIL

SCALE: 3" = 1'-0"

GM-73

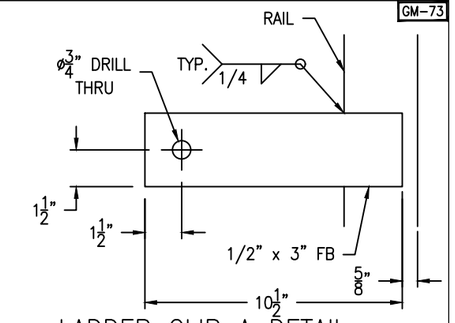

LADDER CLIP A DETAIL

(6 REQ'D) SCALE: 3" = 1'-0"

FC-14

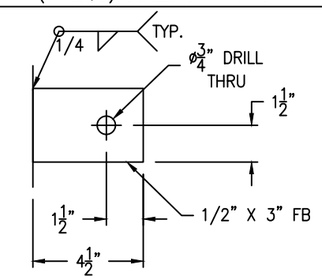

TANK CLIP DETAIL

(4 REQ'D) SCALE: 3" = 1'-0"

GM-73

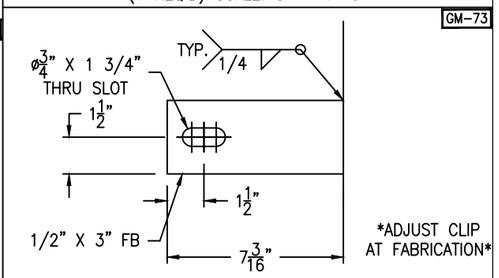

HANDRAIL CLIP DETAIL

(2 REQ'D) SCALE: 3" = 1'-0"

LADDER TO BE HOT-DIPPED GALVANIZED

REV	D.BY	C.BY	DATE	DESCRIPTION
				AS BUILT
2	AD	RS	2/5/26	CERTIFIED
1	RS	NP	1/23/26	APPROVAL REV 1
0	AD	RS	12/5/25	APPROVAL

⚠1 REVISIONS

Savannah Tank & Equipment Corp.
1517 Telfair Road, Savannah, GA 31415
(912) 233-8902

DRAWN BY: AD
CHK'D BY: RS
APPROVED BY: NP
SCALE: 1/4" = 1'-0"

EPIC SYSTEMS GROUP, LLC.
DODECANETHIOL TANK
EQUIP. #T-101
CUST. PO #64354

DRAWING NO.: 102-25-4 SHT 4 OF 5 REV. SET 2

FC-14

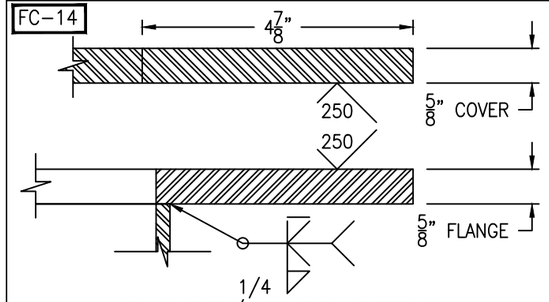

FLANGE/COVER DETAIL

(1 REQ'D) SCALE: 6" = 1'-0"

FC-14

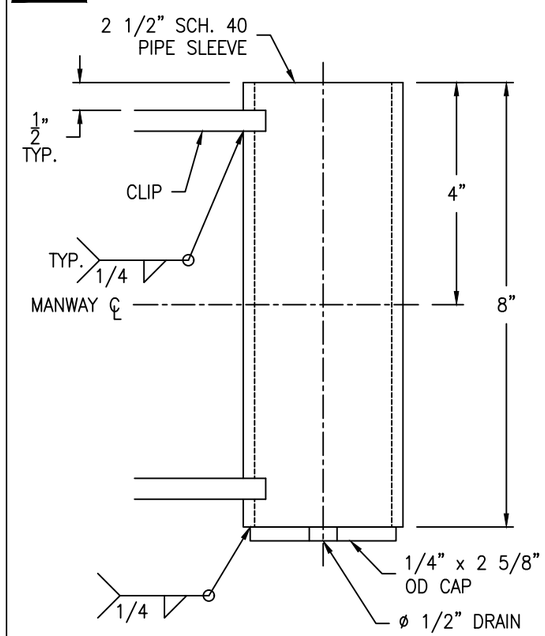

SLEEVE DETAIL

(1 REQ'D) SCALE: 6" = 1'-0"

FC-14

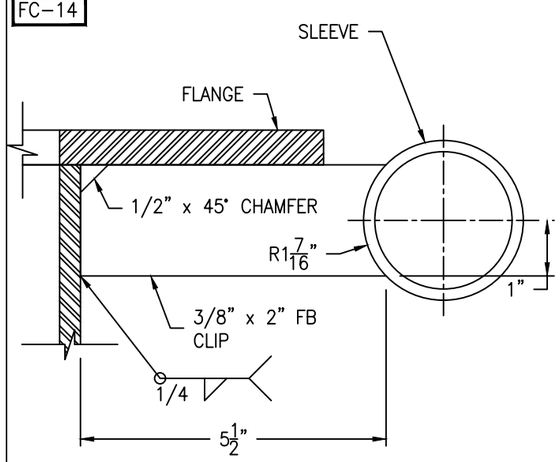

CLIP DETAIL

(2 REQ'D) SCALE: 6" = 1'-0"

FC-14

Bolting for blind
(28) 3/4-10 NC x 2 1/2" HH BOLT
(28) 3/4-10 NC HH NUT
(1) 29 3/8" OD x 24" ID x 1/8" GASKET

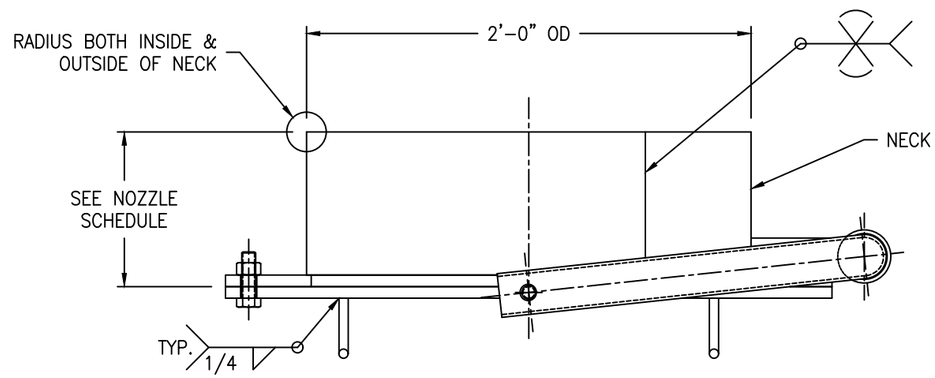

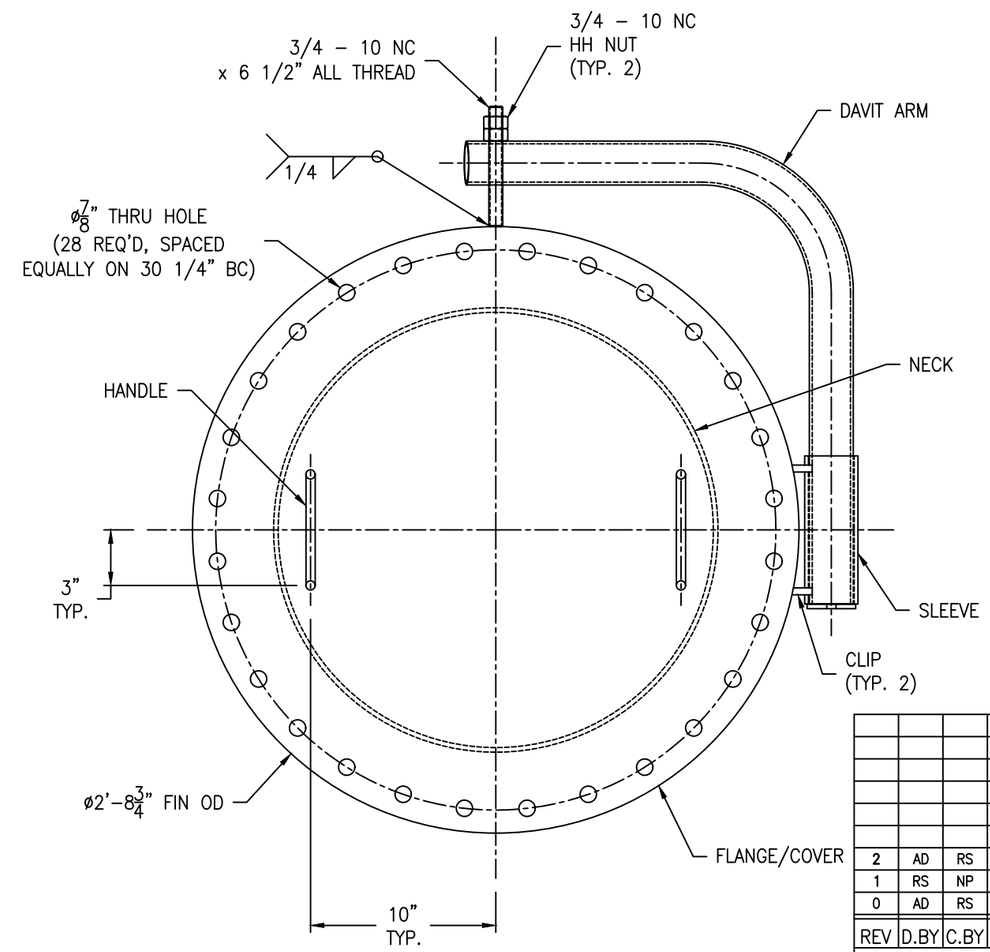

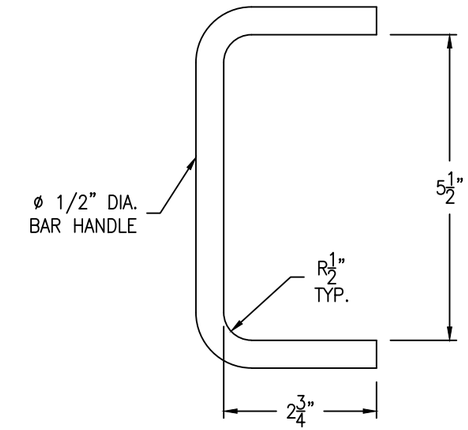

HANDLE DETAIL

(2 REQ'D) SCALE: 6" = 1'-0"

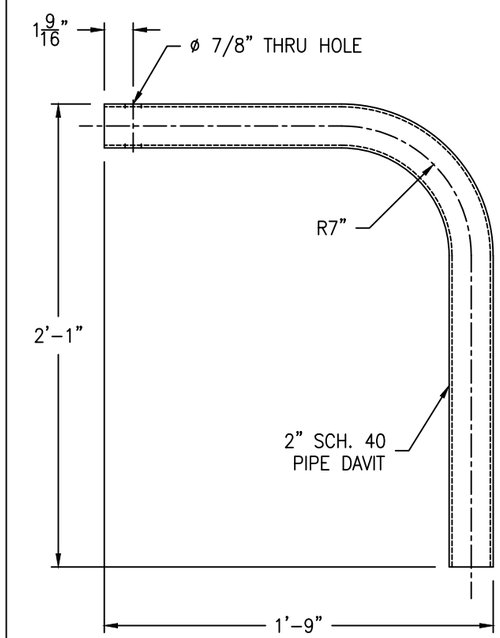

DAVIT ARM DETAIL

(1 REQ'D) SCALE: 2" = 1'-0"

REV	D.BY	C.BY	DATE	DESCRIPTION
				AS BUILT
2	AD	RS	2/5/26	CERTIFIED
1	RS	NP	1/23/26	APPROVAL REV 1
0	AD	RS	12/5/25	APPROVAL

⚠1 REVISIONS

Savannah Tank & Equipment Corp.
1517 Telfair Road, Savannah, GA 31415
(912) 233-8902

DRAWN BY: AD
CHK'D BY: RS
APPROVED BY: NP
SCALE: 1/4" = 1'-0"

EPIC SYSTEMS GROUP, LLC.
DODECANETHIOL TANK
EQUIP. #T-101
CUST. PO #64354

DRAWING NO.: 102-25-5 SHT 5 OF 5 REV. SET 2